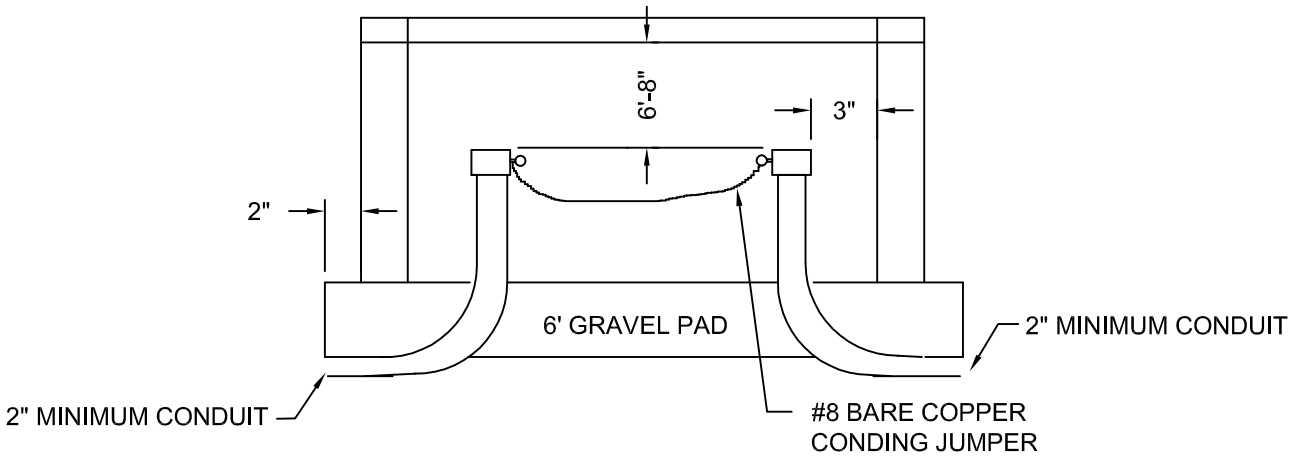

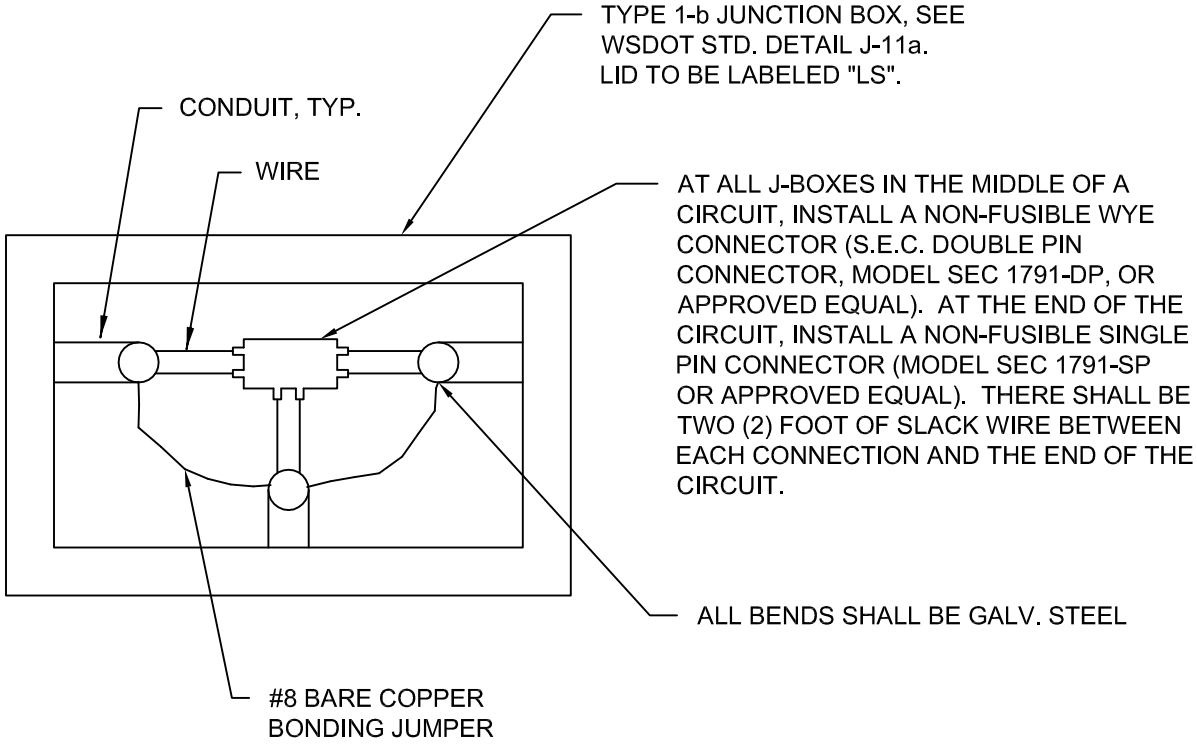

Kelso Longview
Cities Working Together

JUNCTION BOX

STANDARD PLAN:	CITY ENGINEER APPROVAL:
TR - 060	Longview: **C.B.**
DATE: **FEB. 2008**	Kelso: **S.Z.**