Kelso Longview
Cities Working Together

GEOTEXTILE ENCASED CHECK DAM

STANDARD PLAN: **EC - 140**

DATE: **FEB. 2008**

CITY ENGINEER APPROVAL:

Longview: **C.B.**

Kelso: **S.Z.**

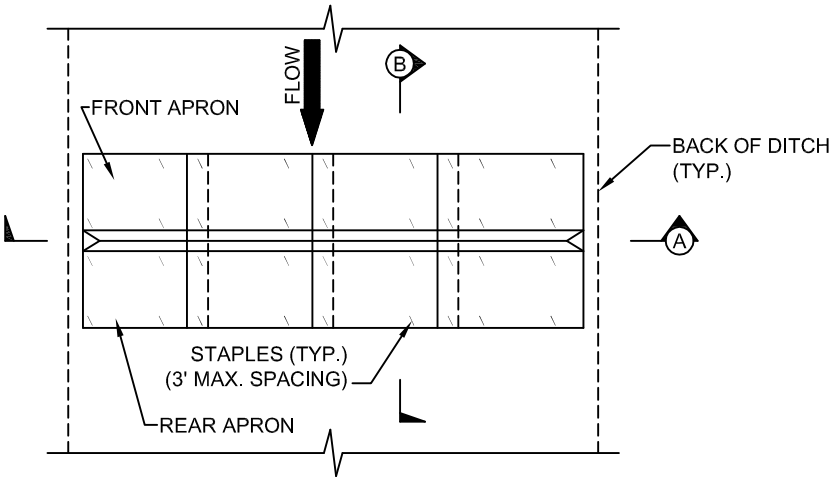

PLAN VIEW

NOTES:

1. GEOTEXTILE ENCASED CHECK DAMS SHALL MEET THE REQUIREMENTS OF STANDARD SPECIFICATIONS 8-01.3 (6)A AND 9-14.5(4)
2. INSTALL THE SLOPED ENDS OF THE CHECK DAM A MINIMUM OF 3" HIGHER THAN THE TOP OF THE CHECK DAMN IN THE CHANNEL TO ENSURE THAT WATER FLOWS OVER THE DAMN AND NOT AROUND IT.
3. FLAT BOTTOM DITCH DESIGN SHOWN. CHECK DAM INSTALLATION DETAILS ARE SIMILAR FOR "V" BOTTOM DITCHES.
4. PERFORM MAINTENANCE IN ACCORDANCE WITH STANDARD SPECIFICATION 8-01.3(15).

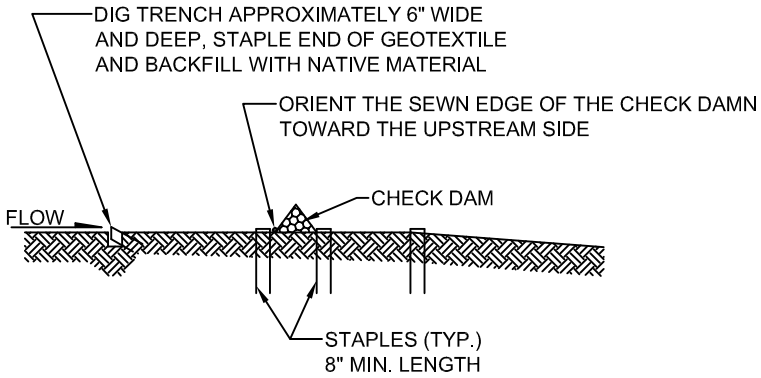

SECTION B

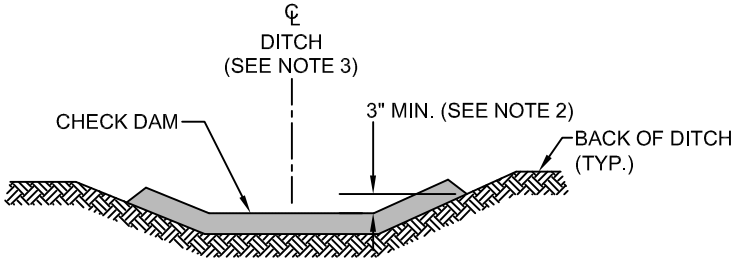

SECTION A

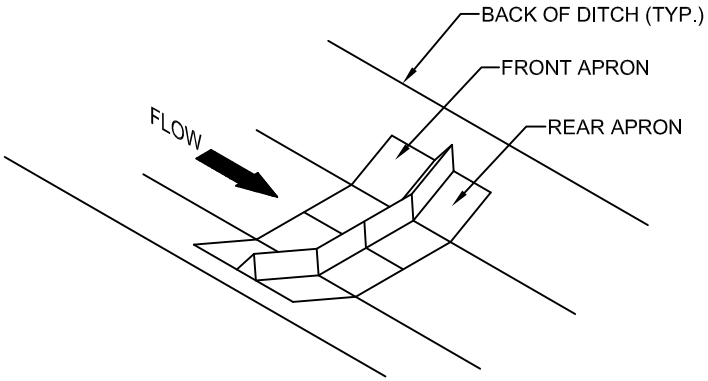

ISOMETRIC VIEW