THE BEST USE OF HAY IS SPREAD ONSITE (BY HAND OR BLOWER TO 2" DEEP). UNDER NO CIRCUMSTANCES SHOULD STRAW BALE BARRIERS BE CONSTRUCTED IN STREAMS, CHANNELS, OR DITCHES.

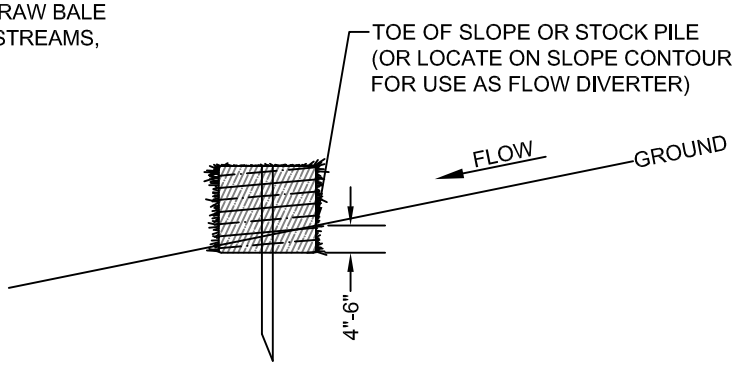

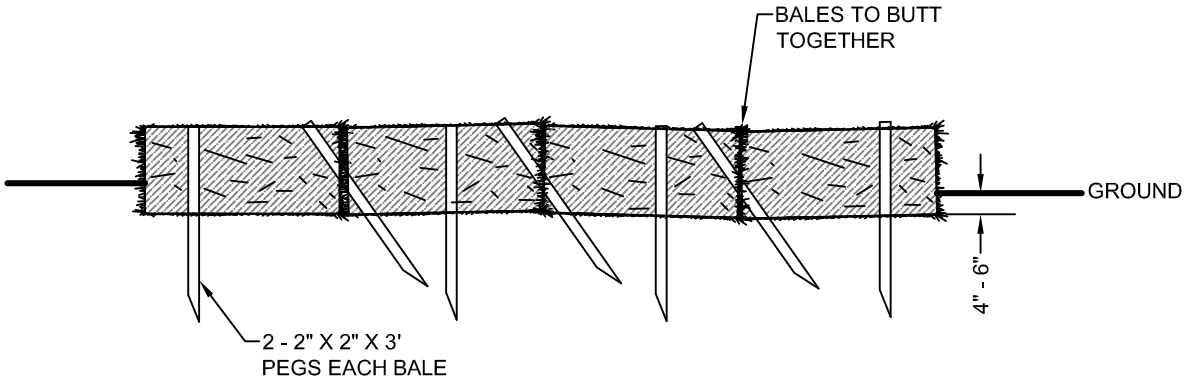

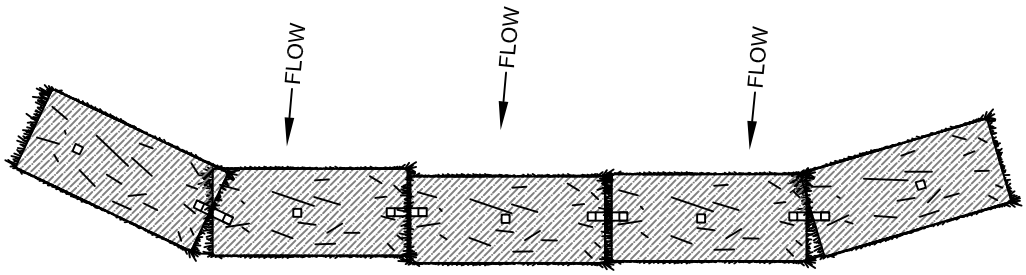

NOTES:

1. EMBED BALES 4 TO 6 INCHES.
2. DRIVE STAKES MINIMUM 12" INTO GROUND SURFACE.
3. DRIVE STAKES FLUSH TO TOP OF BALES.
4. FIRST STAKE IN EACH BALE SHALL BE DRIVEN TOWARD THE PREVIOUSLY LAID BALE TO FORCE THE BALES TOGETHER.
5. THE GAPS BETWEEN THE BALES SHALL BE CHINKED (FILLED BY WEDGING) WITH STRAW TO PREVENT WATER FROM ESCAPING BETWEEN THE BALES.

Kelso Longview
Cities Working Together

STRAW BALE SEDIMENT BARRIER	
STANDARD PLAN: **EC - 050**	CITY ENGINEER APPROVAL: Longview: **C.B.**
DATE: **FEB. 2007**	Kelso: **S.Z.**