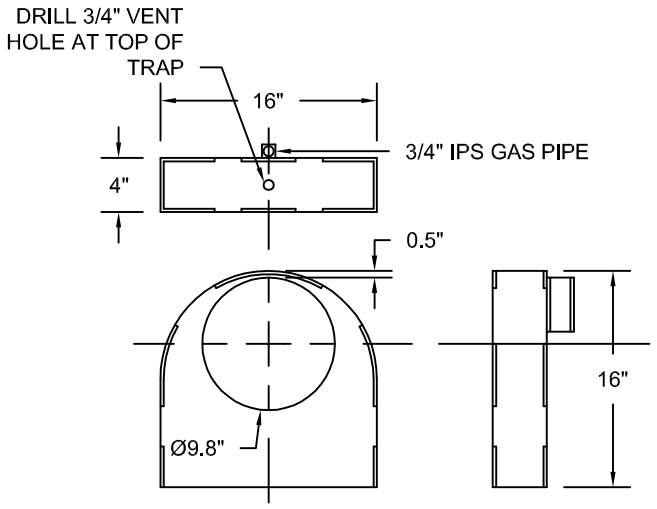

MATERIAL HDPE

LOW PROFILE ELBOW

N.T.S.

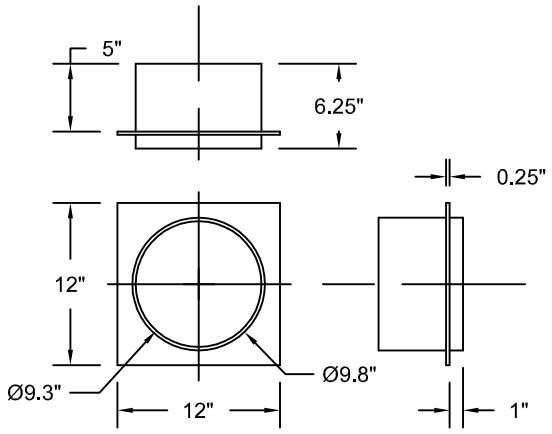

MATERIAL HDPE

ELBOW INSERT

N.T.S.

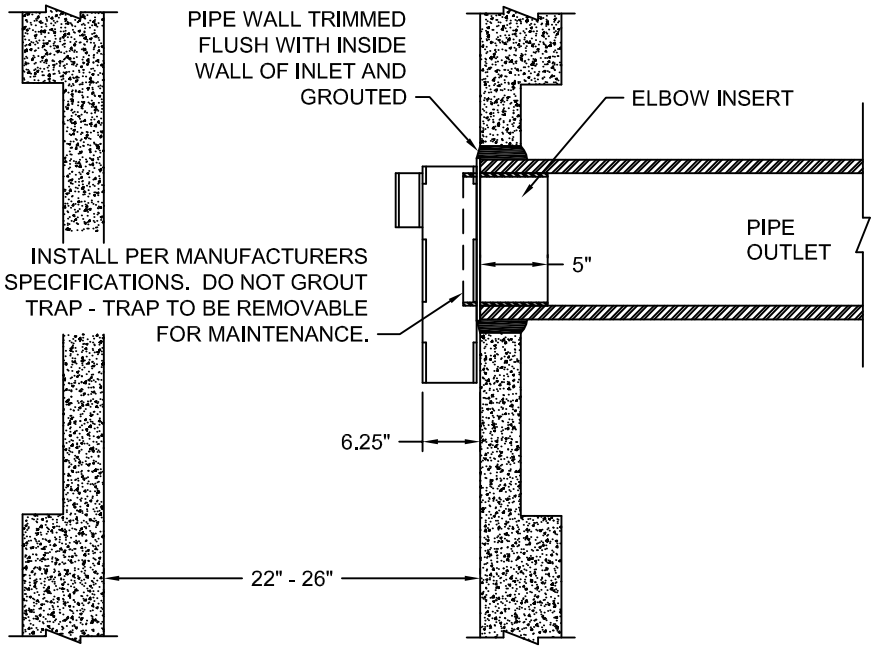

SNOUT OR APPROVED EQUAL SECURED WITH STAINLESS STEEL HARDWARE

Kelso Longview Cities Working Together

CATCH BASIN OUTLET PIPE TRAP

STANDARD PLAN: **SD - 250**	CITY ENGINEER APPROVAL:
DATE: **FEB. 2008**	Longview: **C.B.**
	Kelso: **S.Z.**