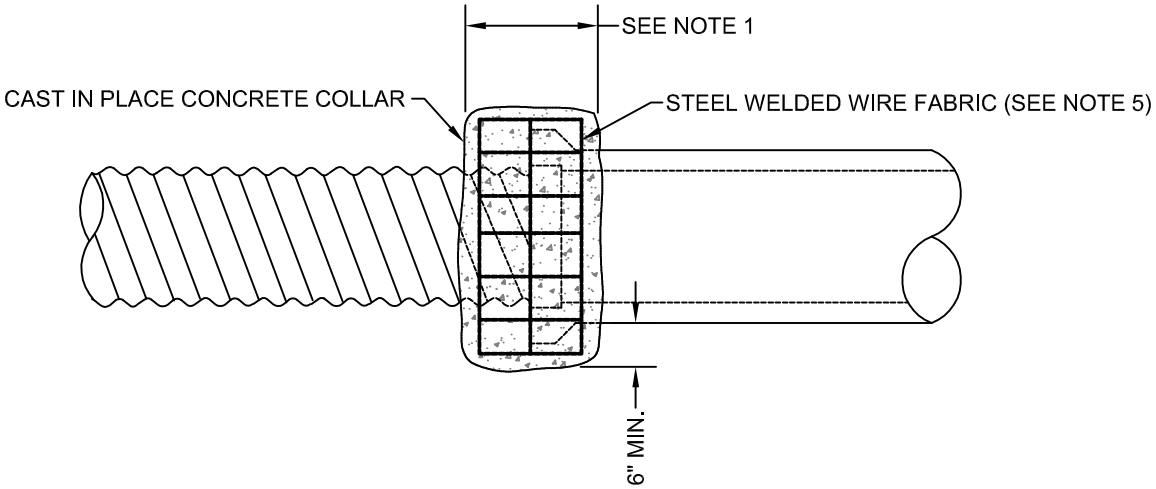

CONCRETE COLLAR OPTION

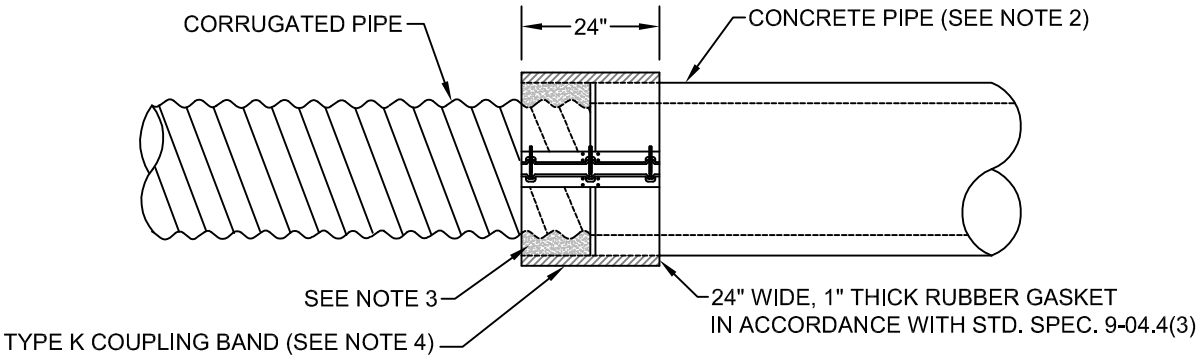

COUPLING BAND OPTION

NOTES:

1. CONCRETE COLLAR WIDTH SHALL BE ONE HALF OF THE OUTSIDE PIPE DIAMETER OF THE LARGEST PIPE. THE MINIMUM COLLAR WIDTH SHALL BE 12". CONCRETE COLLARS MAY BE USED WITH ALL PIPE MATERIALS AND DIAMETERS. THE CONCRETE COLLAR OPTION SHALL ONLY BE USED TO EXTEND EXISTING PIPES.
2. WHEN A COUPLING BAND CONNECTION REQUIRES ATTACHING A BELL END OF A CONCRETE PIPE, THE BELL END OF THE PIPE SHALL BE REMOVED BEFORE THE CONNECTIONS INSTALLED.
3. INCREASE THE OUTSIDE DIAMETER OF THE PIPE TO MATCH THE OUTSIDE DIAMETER OF THE CONCRETE PIPE WITH 12" WIDE RUBBER GASKETS. THICKNESS AS REQUIRED.
4. USE A FLAT TYPE K COUPLING BAND. TYPE K COUPLING BANDS WITH DIMPLES ARE NOT ALLOWED FOR THE INSTALLATION DETAIL SHOWN. THE COUPLING BAND OPTION SHALL ONLY BE USED FOR EXTENDING EXISTING PIPES THAT HAVE AN INSIDE DIAMETER OF 36" OR LESS.
5. STEEL WELDED WIRE FABRIC SHALL BE IN ACCORDANCE WITH SECTION 9-07.7 OF THE STANDARD SPECIFICATIONS. INSTALL TWO WRAPS FOR SIZE 6 X 6 W1.4 X W1.4 (10 GAUGE) STEEL WELDED WIRE FABRIC OR ONE WRAP FOR ANY OF THE FOLLOWING SIZES.
   6 X 6 W2.1 X W2.1 (8 GAGE)
   6 X 6 W2.9 X W2.9 (6 GAGE)
   4 X 4 W2.9 X W2.9 (6 GAGE)
   4 X 4 W4.0 X W4.0 (4 GAGE)

Kelso Longview Cities Working Together

CONNECTION FOR DISSIMILAR CULVERT PIPE

STANDARD PLAN:	CITY ENGINEER APPROVAL:
SD - 220	Longview: **C.B.**
DATE: **FEB. 2007**	Kelso: **S.Z.**