Kelso Longview
Cities Working Together

# MANHOLE SLOPE PROTECTOR

STANDARD PLAN: **SD - 180**

DATE: **FEB. 2008**

CITY ENGINEER APPROVAL:

Longview: **C.B.**

Kelso: **S.Z.**

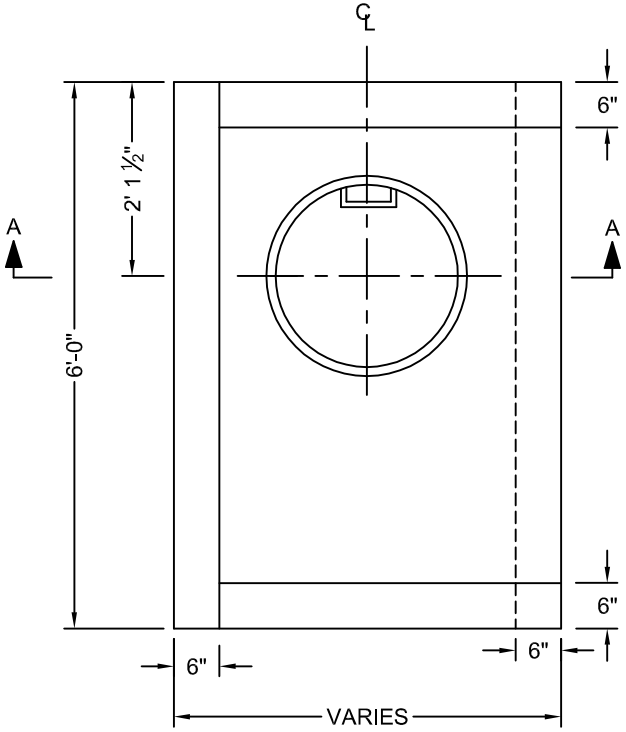


**PLAN**

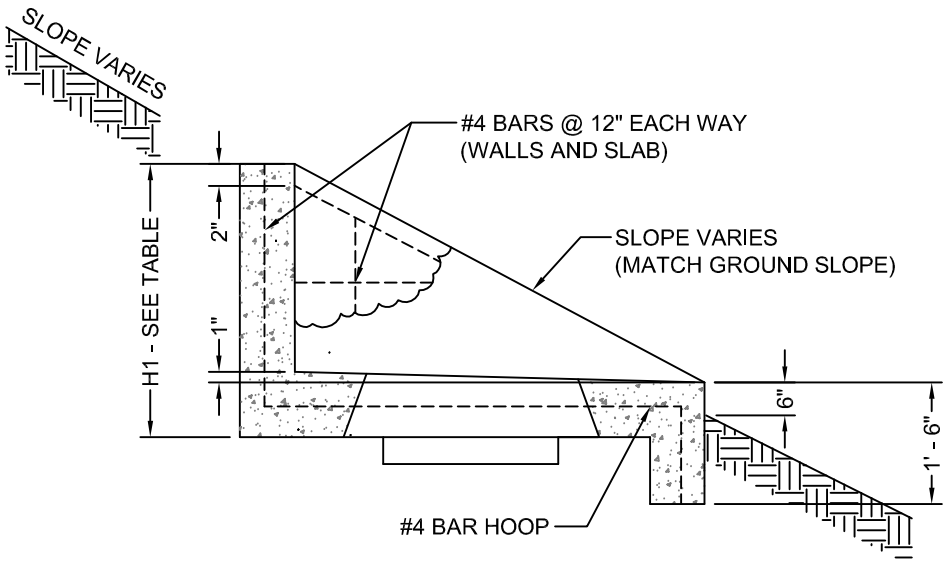


**SECTION A - A**

**NOTE:**

ALL REINFORCING STEEL SHALL BE PLACED 2" CLEAR OF NEAREST FACE OF CONCRETE UNLESS SHOWN OR NOTED OTHERWISE.

| SLOPE | H1 (IN.) | CONC. (CU. YD.) | STEEL (LB.) |
|---|---|---|---|
| 1 : 1.5 | 3' - 0" | 1.00 | 88 |
| 1 : 2 | 2' - 4½" | 0.89 | 75 |
| 1 : 3 | 1' - 9" | 0.78 | 70 |
| 1 : 4 | 1' - 5¼" | 0.72 | 63 |
| 1 : 6 | 1' - 1½" | 0.66 | 60 |