Kelso Longview
Cities Working Together

STORM DRAIN MANHOLE

STANDARD PLAN: **SD - 130**

DATE: **FEB. 2008**

CITY ENGINEER APPROVAL:

Longview: **C.B.**

Kelso: **S.Z.**

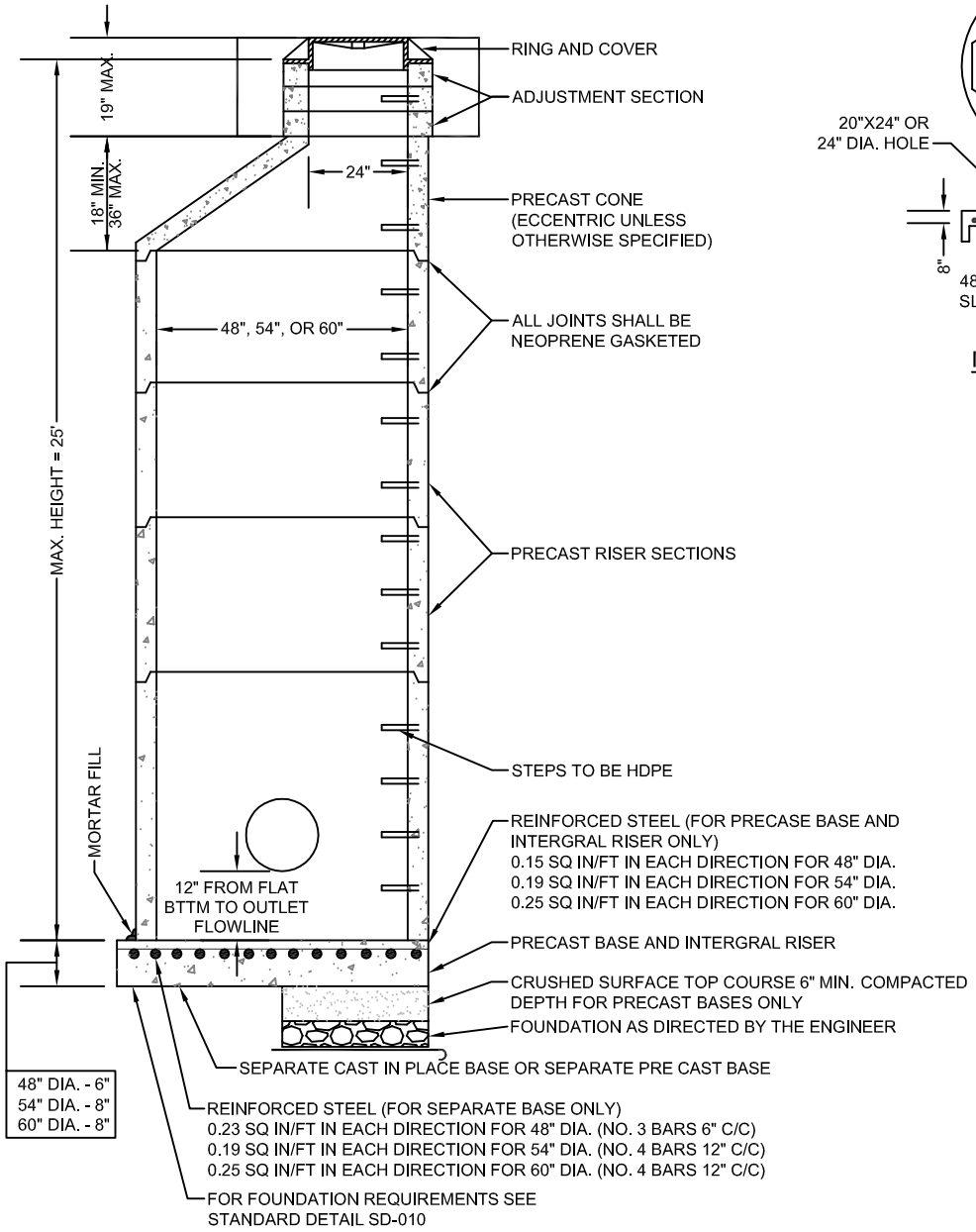

SECTION

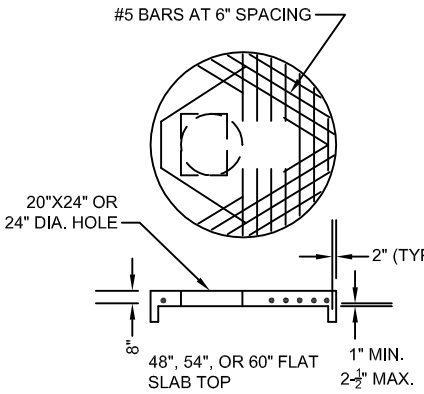

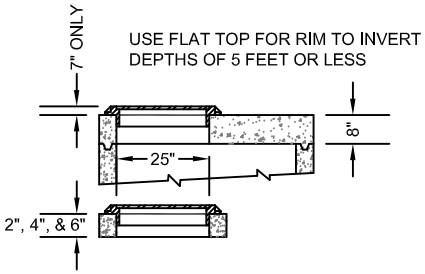

NOTES:

1. MANHOLES TO BE CONSTRUCTED IN ACCORDANCE WITH AASHTO M-199 UNLESS OTHERWISE SHOWN ON PLANS OR NOTED IN THE STANDARD SPECIFICATIONS.
2. HANDHOLDS IN ADJUSTMENT SECTION SHALL HAVE 3" MINIMUM CLEARANCE. STEPS IN MANHOLE SHALL HAVE 6" MINIMUM CLEARANCE. SEE STANDARD PLAN SS-160 "MISCELLANEOUS MANHOLE DETAILS."
3. ALL REINFORCED CAST IN PLACE CONCRETE SHALL BE CLASS 4000. ALL PRECAST CONCRETE SHALL BE CLASS 4000.
4. PRECAST BASES SHALL BE FURNISHED WITH CUTOUTS OR KNOCKOUTS. KNOCKOUTS SHALL HAVE A WALL THICKNESS OF 2" MINIMUM.
5. KNOCKOUT OR CUTOUT HOLE SIZE IS EQUAL TO PIPE OUTER DIAMETER PLUS MANHOLE WALL THICKNESS. MAXIMUM HOLE SIZE IS 36" FOR 49" MANHOLE, 42" FOR 54" MANHOLE. MINIMUM DISTANCE BETWEEN HOLES IS 8".
6. MANHOLE RINGS AND COVERS SHALL BE IN ACCORDANCE WITH CITY OF KELSO/LONGVIEW SPECIFICATIONS & MEET THE STRENGTH REQUIREMENTS OF FEDERAL SPECIFICATIONS RR-F-6210. MATING SURFACES SHALL BE FINISHED TO ASSURE NON-ROCKING FIT WITH ANY COVER POSITIONS.
7. ALL BASE REINFORCING STEEL SHALL HAVE A MINIMUM YIELD STRENGTH OF 60,000 PSI & BE PLACED IN THE UPPER HALF OF THE BASE WITH 1" MINIMUM CLEARANCE.
8. FOR DETAILS SHOWING GRADE RING, LADDER, STEPS, HANDHOLDS & TOP SLABS, SEE STANDARD PLAN SS-160 "MISCELLANEOUS DETAILS".
9. GEOTEXTILE SHALL MEET THE REQUIREMENTS OF SECTION 9-33 & AS NOTED IN THE CITY SPECIAL PROVISIONS HEREIN.
10. GROUTING SHALL BE SUFFICIENT TO PREVENT LEAKS BETWEEN THE PRECAST COMPONENTS OF THE COMPLETED STRUCTURE & SHALL BE PERFORMED INSIDE, BETWEEN & OUTSIDE OF ALL RISERS, JOINTS & PIPE PENETRATIONS.
11. ALL RISERS OR ADJUSTMENT SECTIONS SHALL BE THE SAME INSIDE DIMENSIONS AS BASE SECTIONS.

MANHOLE DIMENSION TABLE

DIA.	WALL THICKNESS	BASE THICKNESS	MAXIMUM KNOCKOUT SIZE	MINIMUM DISTANCE BETWEEN KNOCKOUTS	BASE REINFORCING STEEL $in^2/ft.$ IN EACH DIRECTION	
					SEPARATE BASE	INTEGRAL BASE
48"	4"	6"	36"	8"	0.23	0.15
54"	4.5"	8"	42"	8"	0.19	.019
60"	5"	8"	48"	8"	0.25	.025
72"	6"	8"	60	12"	0.35	0.24
84"	8"	12"	72"	12"	0.39	.029
96"	8"	12"	84"	12"	0.39	0.29