Kelso Longview
Cities Working Together

DITCH INLET

STANDARD PLAN: **SD - 120**

DATE: **FEB. 2008**

CITY ENGINEER APPROVAL:

Longview: **C.B.**

Kelso: **S.Z.**

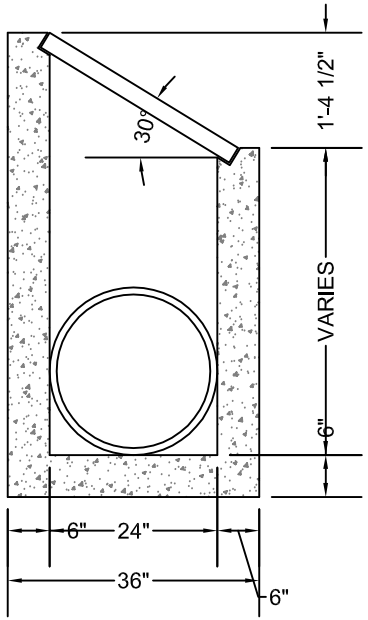

SECTION A-A

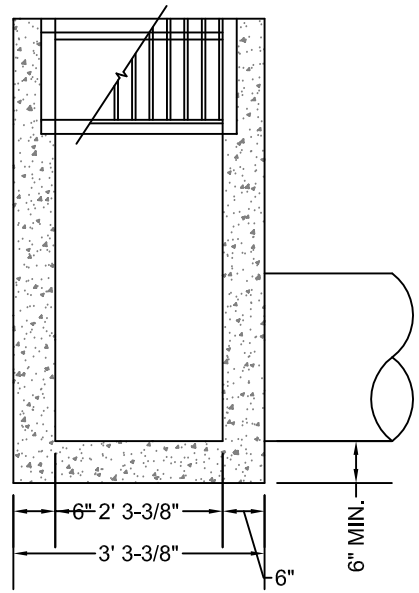

SECTION B-B

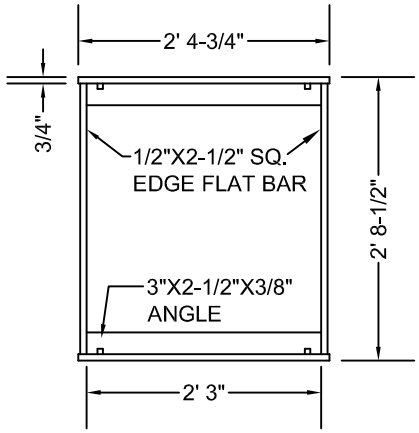

FRAME PLAN

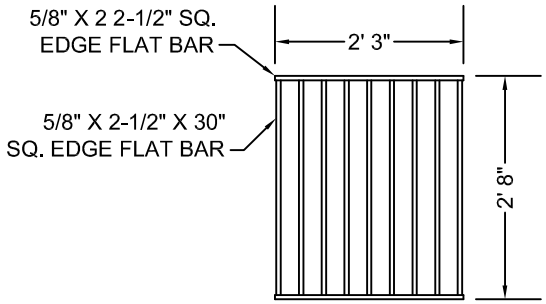

PLAN

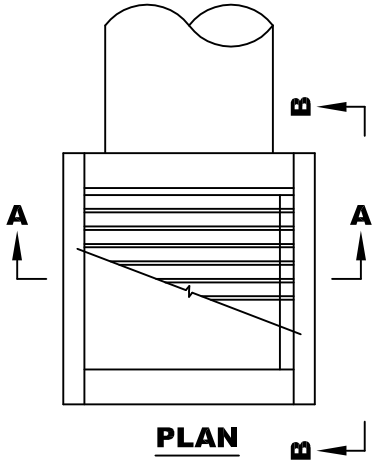

PLAN

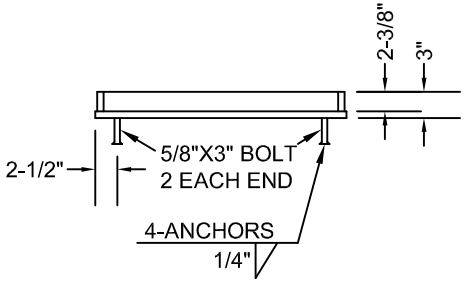

FRAME SECTION

NOTE:
$\frac{3}{8}$" CROSS BARS SHALL BE FLUSH WITH THE GRATE SURFACE AND MAY BE FILLET WELDED, RESISTANCE WELDED OR ELECTROFORGED TO BEARING BARS.

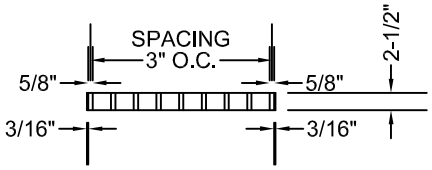

GRATE SECTION
TYPE 1

NOTE:

1. CONCRETE STRENGTH SHALL BE COMMERCIAL GRADE CONCRETE.
2. G-2 GRATES MAY BE USED IF APPROVED BY THE ENGINEER.
3. CATCH BASIN, FRAME & GRATES SHALL MEET H20 LOADING.
4. INSIDE FRAME DIMENSIONS: 2' 3-$\frac{3}{8}$" X 2' 8-$\frac{1}{2}$"
5. GROUTING SHALL BE SUFFICIENT TO PREVENT LEAKS BETWEEN THE PRECAST COMPONENTS OF THE COMPLETED STRUCTURE & SHALL BE PERFORMED INSIDE, BEWTWEEN & OUTSIDE OF ALL RISERS, JOINTS & PIPE PENETRATIONS.
6. ALL RISERS OR ADJUSTMENT SECTIONS SHALL BE THE SAME INSIDE DIMENSIONS AS BASE SECTIONS.