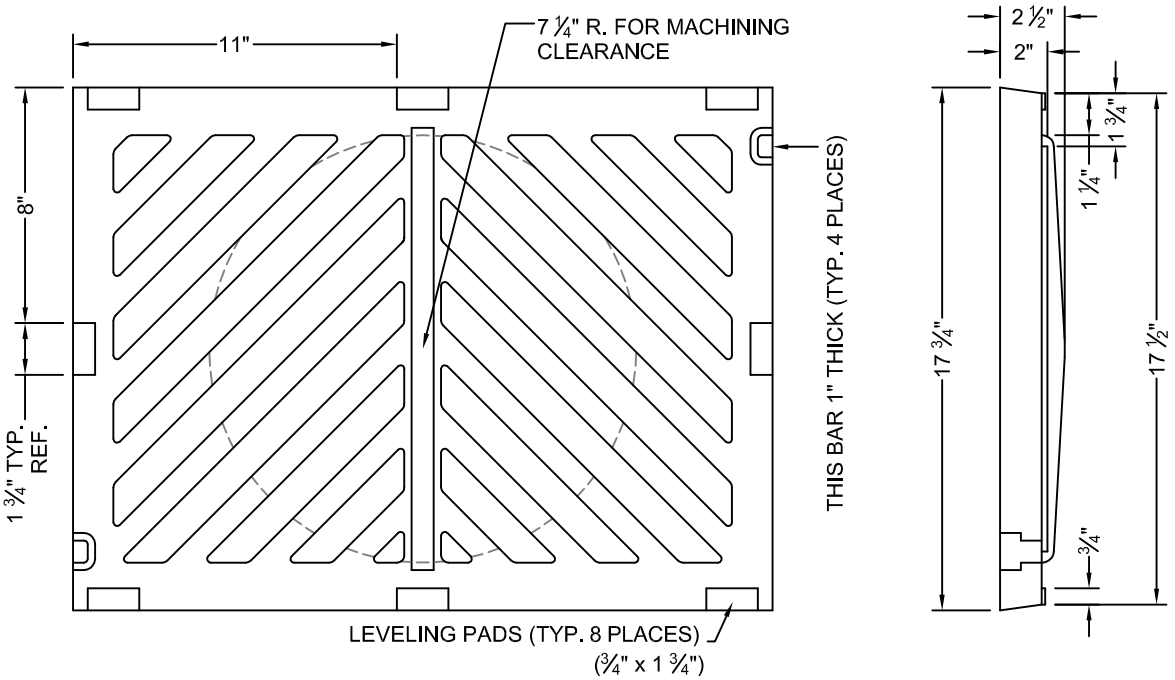

BOTTOM VIEW

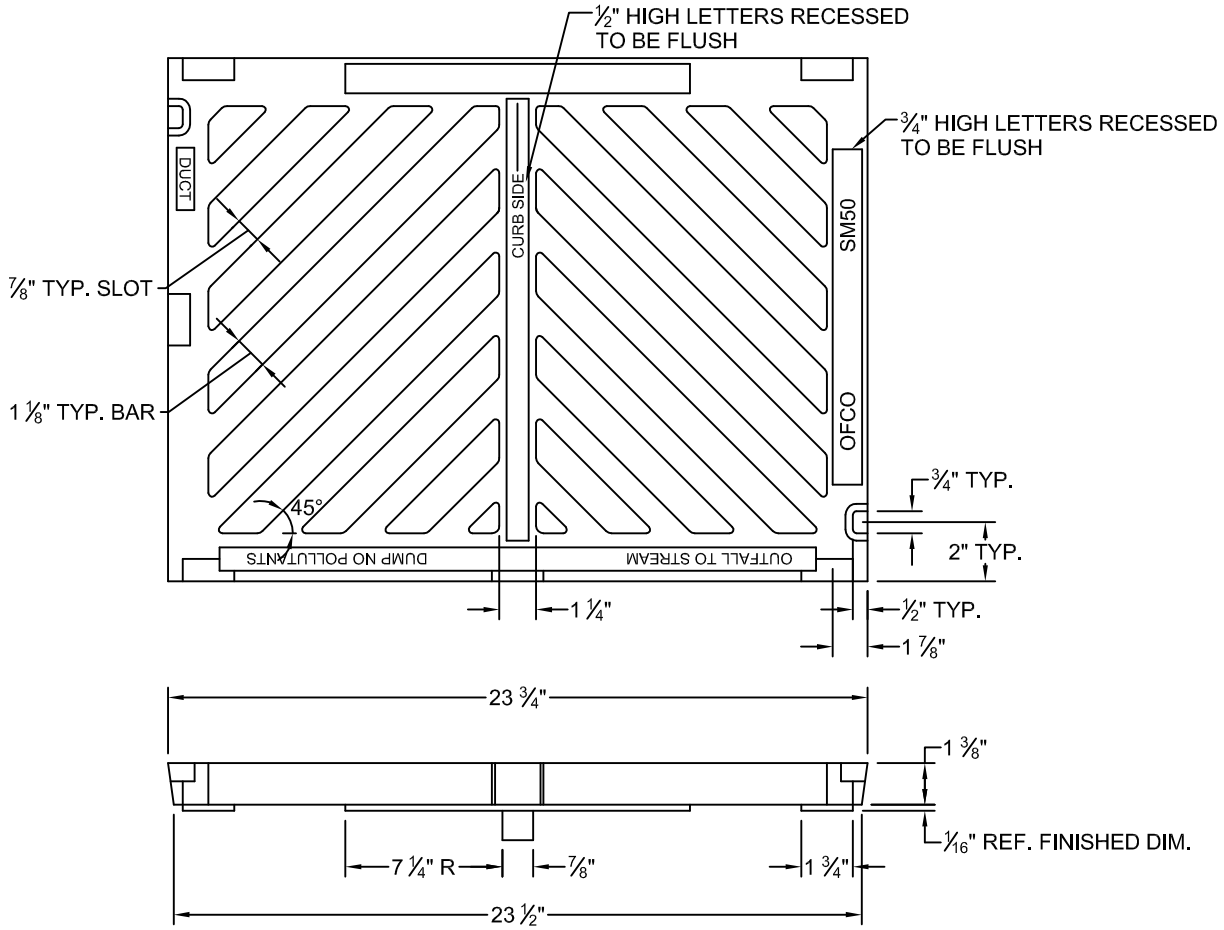

Kelso Longview Cities Working Together

CATCH BASIN GRATE

STANDARD PLAN:	CITY ENGINEER APPROVAL:
SD - 110	Longview: **C.B.**
DATE: **FEB. 2007**	Kelso: **S.Z.**