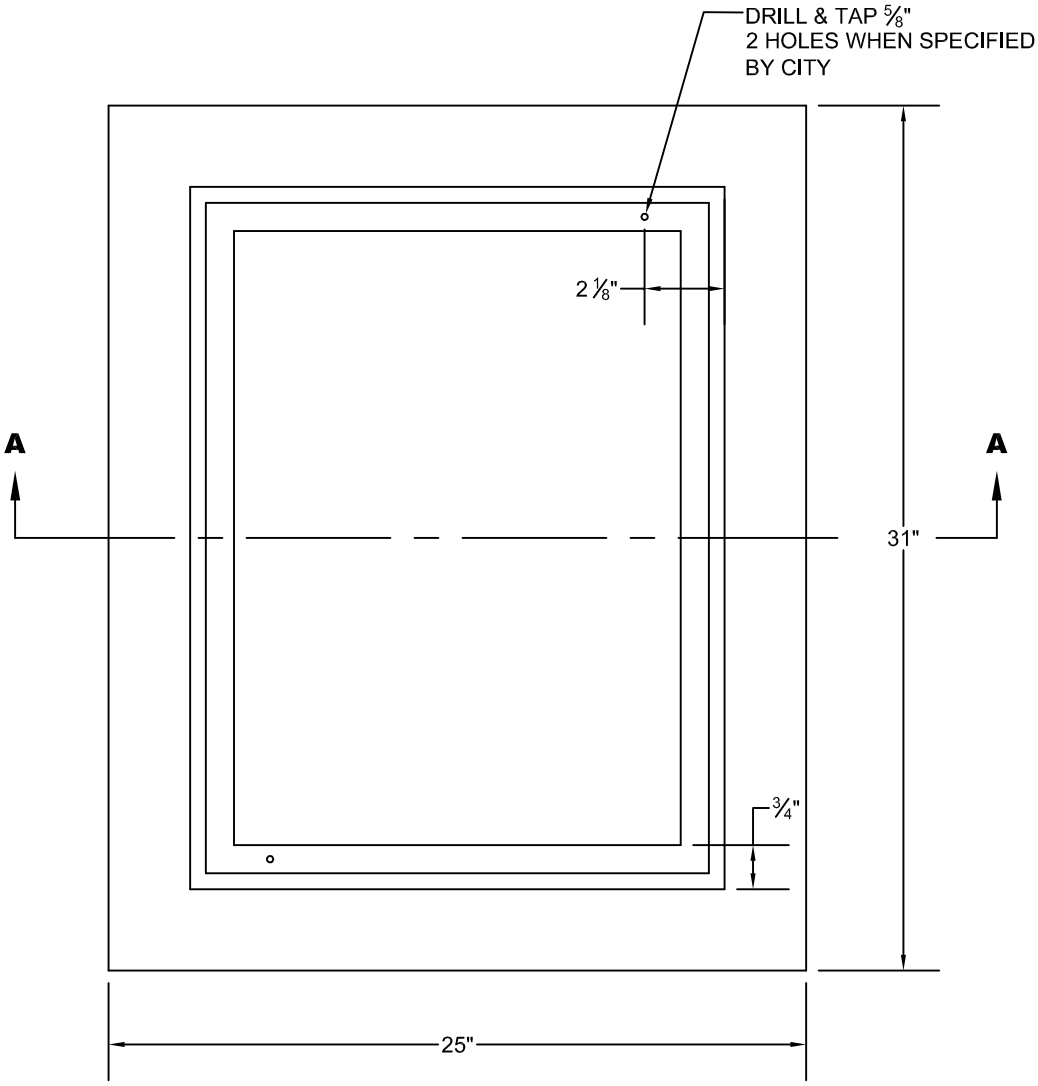

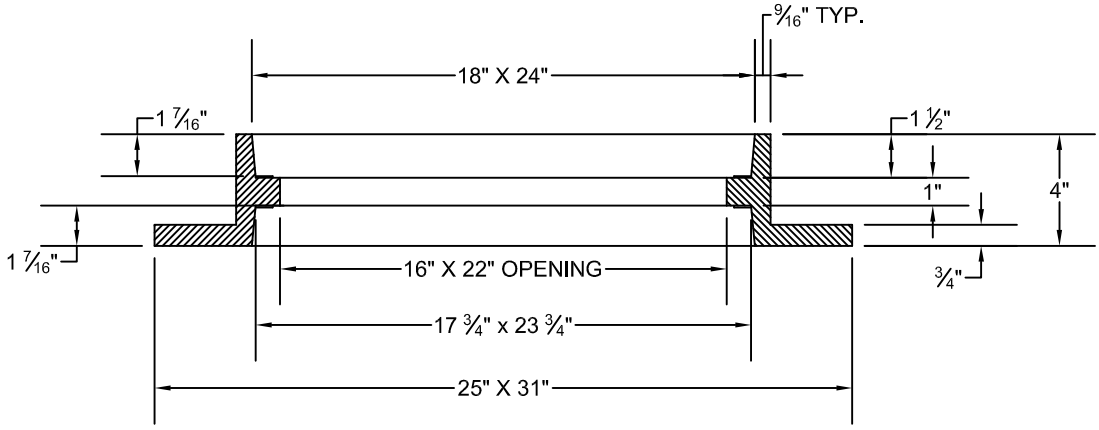

SECTION A-A

CAST IRON PER
ASTM A48 CL.30

Kelso Longview
Cities Working Together

STANDARD INLET FRAME

STANDARD PLAN:	CITY ENGINEER APPROVAL:
SD - 100	Longview: **C.B.**
DATE: **FEB. 2007**	Kelso: **S.Z.**