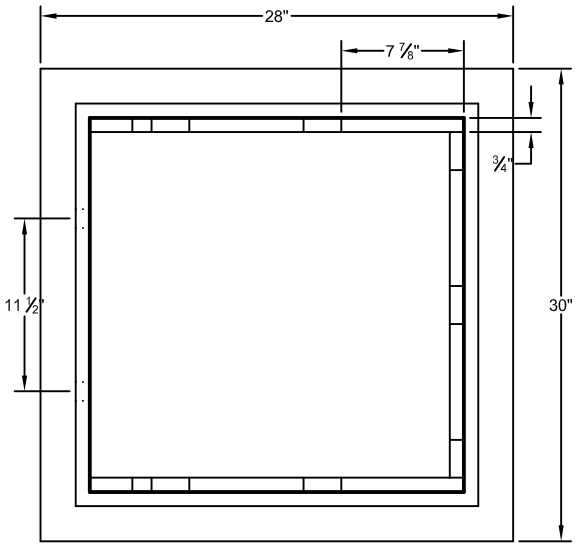

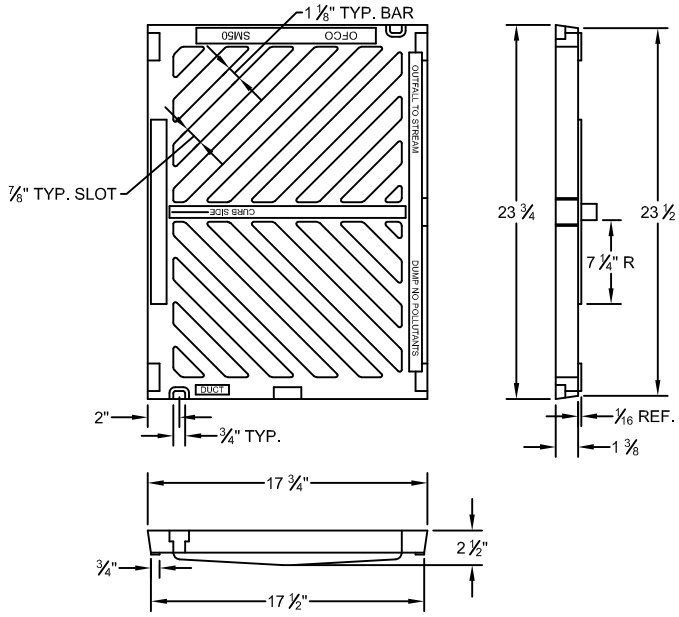

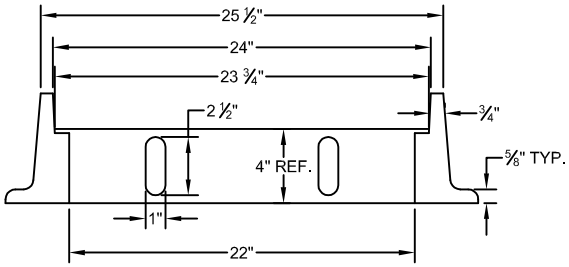

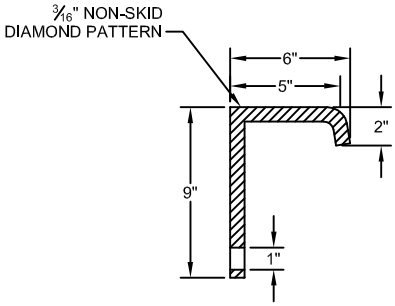

9" HOOD

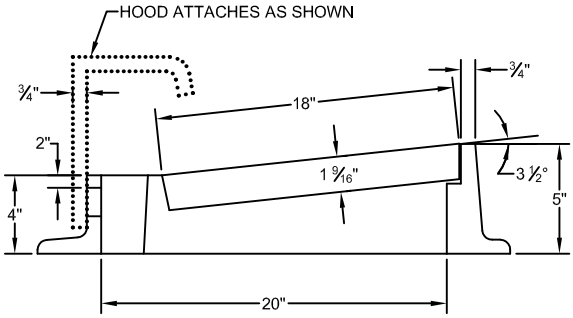

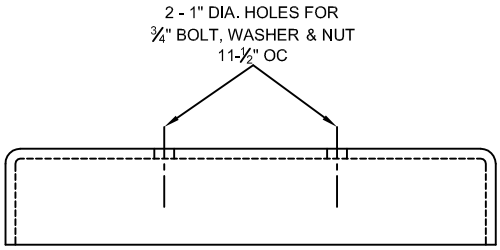

Kelso Longview
Cities Working Together

18" x 24" THRU CURB FRAME, HOOD & GRATE

STANDARD PLAN:	CITY ENGINEER APPROVAL:
SD - 070	Longview: **C.B.**
DATE: **FEB. 2007**	Kelso: **S.Z.**