Kelso Longview
Cities Working Together

PRECAST CATCH BASIN TYPE 1L

STANDARD PLAN: **SD - 020**

DATE: **FEB. 2008**

CITY ENGINEER APPROVAL:

Longview: **C.B.**

Kelso: **S.Z.**

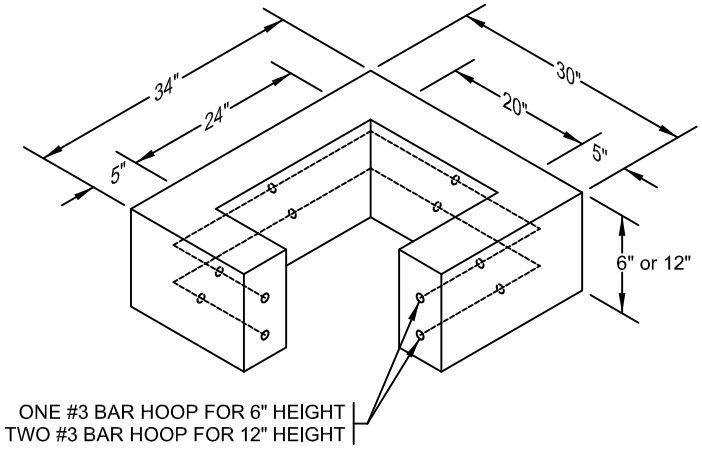

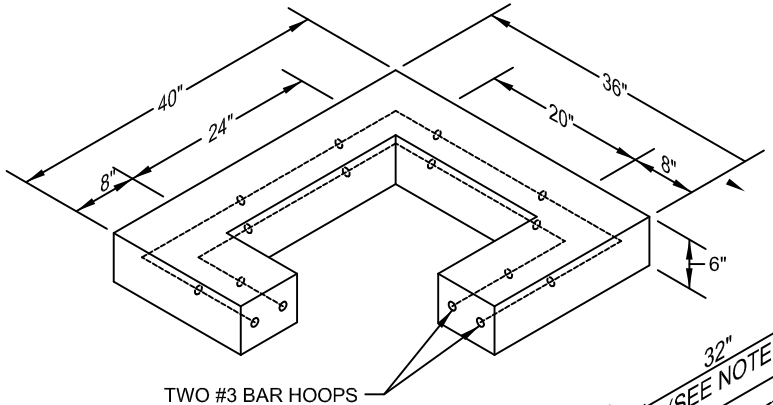

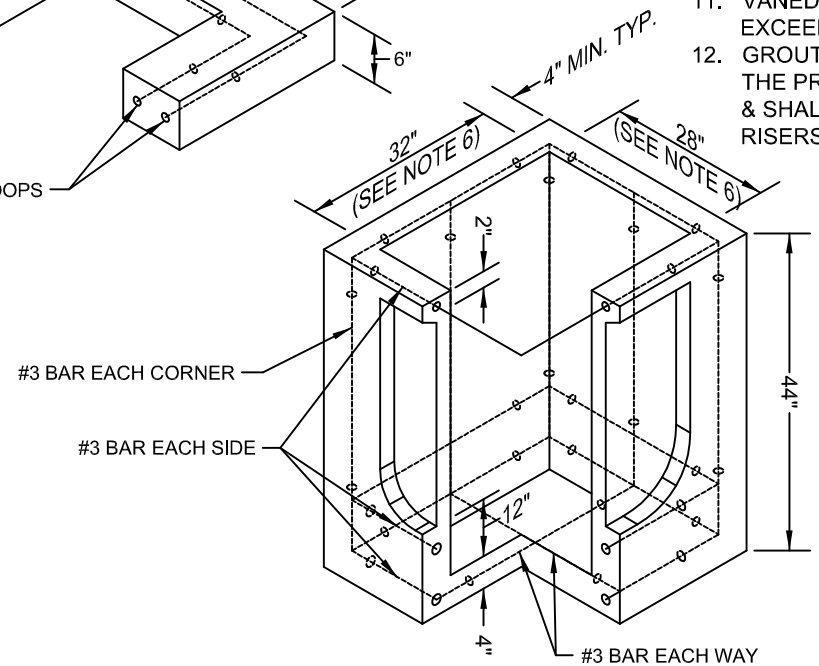

NOTES:

1. AS AN ACCEPTABLE ALTERNATE TO REBAR, WIRE MESH HAVING A MINIMUM AREA OF 0.12 SQUARE INCHES PER FOOT MAY BE USED. WIRE MESH SHALL NOT BE PLACED IN KNOCKOUTS.
2. THE KNOCKOUT DIAMETER SHALL NOT BE GREATER THAN 26". KNOCKOUTS SHALL HAVE A WALL THICKNESS OF 2" MINIMUM TO 2.5" MAXIMUM. PROVIDE A 1.5" MINIMUM GAP BETWEEN THE KNOCKOUT WALL AND THE OUTSIDE OF THE PIPE. AFTER THE PIPE IS INSTALLED, FILL THE GAP WITH JOINT MORTAR.
3. THE MAXIMUM DEPTH FROM THE FINISHED GRADE TO THE PIPE INVERT SHALL BE 5'.
4. FRAME AND GRATE MAY BE INSTALLED WITH FLANGE DOWN OR CAST INTO ADJUSTMENT SECTION.
5. THE PRECAST BASE SECTION MAY HAVE A ROUNDED FLOOR AND THE WALLS MAY BE SLOPED AT A RATE OF 1:24 OR STEEPER.
6. OPENING SHALL BE MEASURED AT THE TOP OF THE PRECAST BASE SECTION.
7. PIPE ENDS SHALL BE FLUSH WITH THE INNER WALL OR 1" MAXIMUM INTRUSION.
8. FOR FOUNDATION REQUIREMENTS SEE STANDARD DETAIL SD-010.
9. ALL RISERS OR ADJUSTMENT SECTIONS SHALL BE THE SAME INSIDE DIMENSIONS AS BASE SECTIONS.
10. GEOTEXTILE SHALL MEET THE REQUIREMENTS OF SECTION 9-33 & AS NOTED IN THE CITY SPECIAL PROVISIONS HEREIN.
11. VANED GRATES REQUIRED ON ALL CATCH BASINS FOR SOLPES EXCEEDING 7%.
12. GROUTING SHALL BE SUFFICIENT TO PREVENT LEAKS BETWEEN THE PRECAST COMPONENTS OF THE COMPLETED STRUCTURE & SHALL BE PERFORMED INSIDE, BETWEEN & OUTSIDE OF ALL RISERS, JOINTS & PIPE PENETRATIONS.

PIPE ALLOWANCES	
PIPE MATERIAL	MAXIMUM INSIDE DIAMETER
REINFORCED OR PLAIN CONCRETE	18"
ALL METAL PIPE	21"
CPSSP * (STD. SPEC. 9-05.20)	18"
SOLID WALL PVC (STD. SPEC. 9-05.12(1)	21"
PROFILE WALL PVC (STD. SPEC. 9-05.12(2)	21"

* CORRUGATED POLYETHYLENE STORM SEWER PIPE